Dual-Axis Solar Tracker for Maximum Power Generation

JAYALATHGE R.S.
Department of Electrical Engineering
University of Moratuwa
Moratuwa, Sri Lanka
230270G

JAYASEKARA N.A.S.N
Department of Electrical Engineering
University of Moratuwa
Moratuwa, Sri Lanka
230276F

JAYASINGHE M.W.
Department of Electrical Engineering
University of Moratuwa
Moratuwa, Sri Lanka
230282U

***Abstract*—This study focuses on the design and simulation of a dual-axis solar tracking system to increase the amount of energy captured by photovoltaic panels. We used MATLAB to calculate the solar azimuth and elevation angles using solar geometry equations, and these angles are used as reference inputs for a Simulink-based tracking model that includes motor actuation and worm–gear mechanisms. The mechanical design of the system is also tested using SolidWorks motion simulation. The results show that the dual-axis tracking system maintains better panel alignment than fixed systems, proving its effectiveness in improving solar energy capture.**

I. Introduction

A. Background of the Study

The global shift toward renewable energy sources has increased the need to improve the efficiency of solar photovoltaic systems. Although PV technology has developed significantly, energy losses caused by improper panel orientation remain a major challenge. Solar irradiance varies throughout the day and across seasons due to the Earth's rotation and axial tilt. Fixed-tilt solar panels are unable to respond to these variations, resulting in inefficient utilization of available solar energy.

B. Research Problem Identification

Despite the availability of solar tracking technologies, many PV installations still rely on fixed or single-axis systems. This is mainly due to concerns related to system cost, mechanical complexity, and long-term reliability. In addition, there is a lack of integrated simulation-based studies that analyze solar position computation, dynamic tracking behavior, and mechanical feasibility of dual-axis solar tracking systems together prior to physical implementation.

C. Aim of the Study

The aim of this study is to design and simulate a dual-axis solar tracking system using an integrated MATLAB, Simulink, and SolidWorks framework to evaluate its effectiveness in improving solar panel alignment and energy capture.

D. Research Objectives

The objectives of this study were to compute solar azimuth and elevation angles using analytical solar geometry equations in MATLAB, to develop a Simulink-based dual-axis solar tracking model incorporating motor actuation and mechanical constraints, and to design and validate the mechanical structure of the tracker using SolidWorks motion simulation. Additionally, we used simulation results to evaluate the effectiveness of the proposed dual-axis tracking system in comparison with fixed solar panel configurations.

E. Significance of the Study

This study presents a comprehensive simulation-based approach to the design of a dual-axis solar tracking system. By integrating analytical solar position modeling, dynamic system simulation, and mechanical validation, we provide insights into system performance prior to hardware implementation. The findings of this research can support the development of efficient and cost-effective solar tracking solutions.

II. Literature Review

Several studies have shown that fixed solar photovoltaic systems experience significant energy losses because the panels cannot remain aligned with the sun throughout the day. This problem is especially noticeable during early morning and late afternoon hours, when the angle of incoming sunlight changes rapidly [1]. As a result, fixed systems are unable to make full use of the available solar energy.

To reduce these losses, solar tracking systems have been developed to adjust the orientation of solar panels according to the sun's position. Research comparing different tracking approaches indicates that single-axis trackers can improve energy output by tracking the sun's movement in one direction, usually from east to west. However, dual-axis tracking systems provide higher efficiency by adjusting both the azimuth and elevation angles, allowing the panels to remain nearly perpendicular to sunlight throughout the day and across different seasons [2].

Despite their performance advantages, several studies point out that dual-axis solar tracking systems introduce higher mechanical complexity. Researchers have raised concerns related to increased system cost, maintenance requirements, and long-term mechanical reliability, particularly when such systems are deployed in harsh outdoor environments [3].

Recent literature highlights the importance of simulation-based studies before implementing solar tracking systems in real-world applications. Accurate solar position algorithms are

widely used to calculate the sun's azimuth and elevation angles, which serve as reference inputs for tracking mechanisms [4]. These calculations help improve tracking accuracy and system performance.

In addition, dynamic simulation tools are commonly employed to analyze motor behavior, control response, and tracking accuracy. Mechanical modeling using CAD software is also increasingly used to verify structural feasibility, motion coordination, and possible mechanical constraints. However, many existing studies focus on only one or two aspects of the system.

Only a limited number of studies integrate solar position modeling, dynamic tracking simulation, and mechanical validation within a single unified framework. This gap in existing research provides the motivation for the integrated approach adopted in this study.

III. IDEAL SOLUTION: DUAL-AXIS SOLAR TRACKING SYSTEM

A. Overview of the Ideal Solution

The main limitation of fixed solar photovoltaic systems is their inability to adapt to the continuously changing position of the sun. This results in reduced energy capture throughout the day and across seasons. To overcome this limitation, an ideal solution should ensure continuous alignment of the solar panel with the sun while maintaining mechanical stability and system reliability.

In this study, we identified a dual-axis solar tracking system as the ideal solution. Unlike fixed or single-axis systems, a dual-axis tracker allows the solar panel to rotate in both horizontal (azimuth) and vertical (elevation) directions. This enables the panel to follow the sun's daily and seasonal movement more accurately and maintain optimal orientation for longer periods.

B. Justification of the Selected Solution

The dual-axis approach was selected because it provides higher tracking accuracy and improved solar energy utilization compared to other configurations. Although dual-axis systems introduce additional mechanical complexity, this challenge can be addressed through proper design and controlled actuation. By combining analytical solar position calculation, dynamic system modeling, and mechanical validation, the selected solution balances performance improvement with practical feasibility.

This study adopts a simulation-based implementation of the dual-axis solar tracking system using MATLAB, Simulink, and SolidWorks. This integrated approach allows the ideal solution to be evaluated comprehensively before physical implementation.

IV. METHODOLOGY AND SYSTEM OVERVIEW

This chapter presents an overview of the proposed dual-axis solar tracking system and explains the methodology followed to design, simulate, and evaluate its performance. A simulation-based approach was used to study the system before physical implementation. MATLAB, Simulink, and SolidWorks were used together to analyze solar position calculation, dynamic tracking behavior, and mechanical feasibility.

A. System Overview

The proposed system is a dual-axis solar tracking system designed to continuously align a photovoltaic panel with the sun. The system operates by first determining the position of the sun and then adjusting the orientation of the solar panel accordingly. Two rotational axes are used: one to control horizontal movement and another to control vertical movement. By combining analytical calculations, dynamic system modeling, and mechanical validation, the system ensures accurate tracking and stable operation.

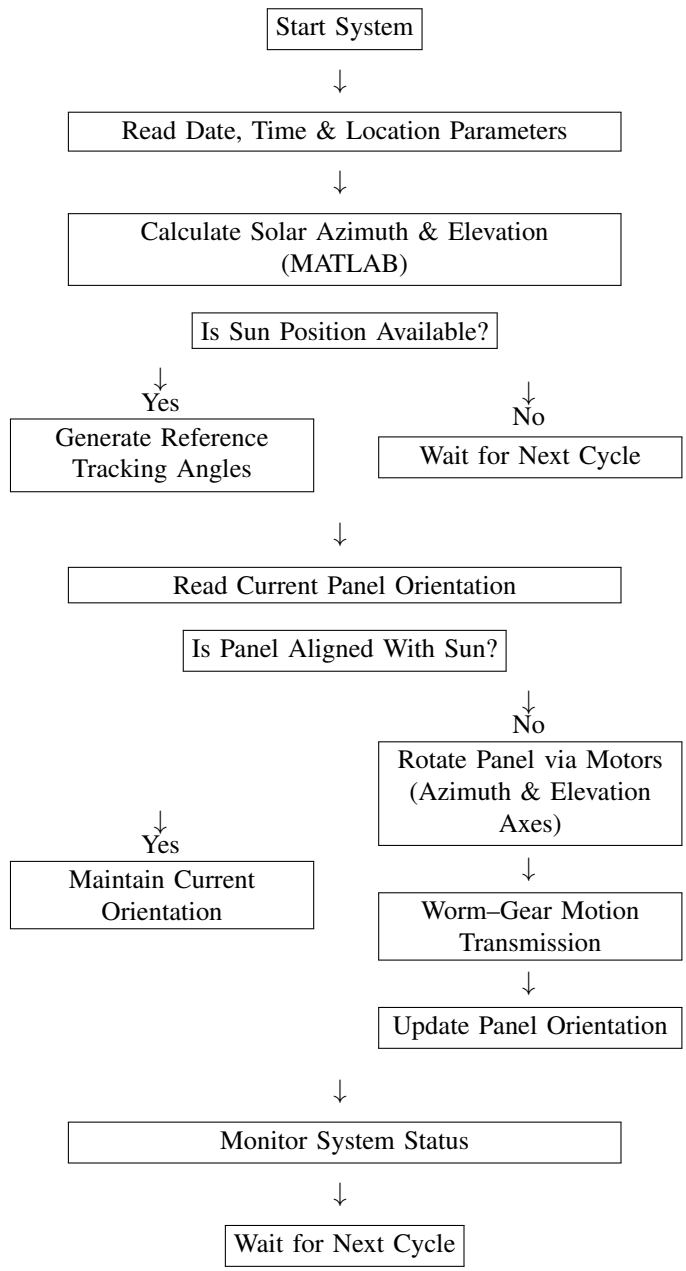

Fig. 1. Control Logic Flowchart of Dual-Axis Solar Tracking System

B. Overall Methodology

The methodology followed in this study consists of three main stages. First, the position of the sun is calculated using MATLAB to obtain solar azimuth and elevation angles. Second, these angles are applied as reference inputs to a Simulink-based dynamic tracking model to simulate system behavior and control response. Finally, the mechanical structure of the tracking system is designed and validated using SolidWorks motion simulation. This step-by-step approach allows the performance of the system to be evaluated comprehensively before hardware implementation.

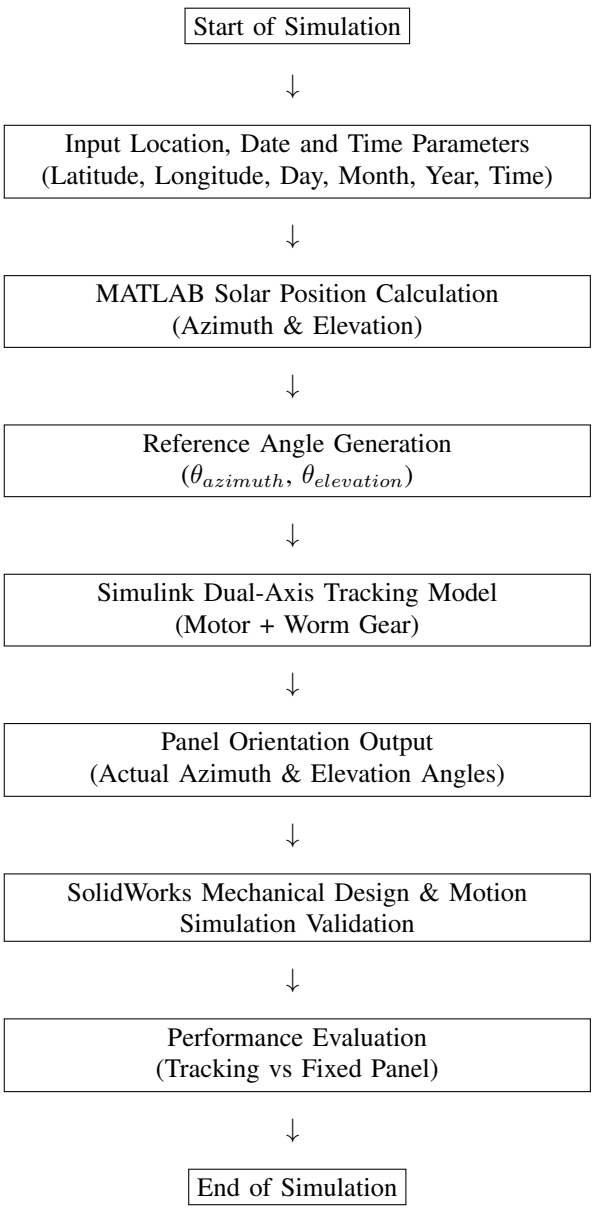

Fig. 2. Simulation Methodology Flow

C. Solar Position Calculation Using MATLAB

We used MATLAB to calculate the position of the sun throughout the day. Analytical solar geometry equations were applied to compute the solar azimuth and elevation angles based on geographic location, date, and time. These angles represent the ideal orientation of the solar panel at each time step and were used as reference inputs for the tracking system. MATLAB was selected because it provides accurate numerical computation and efficient data analysis capabilities.

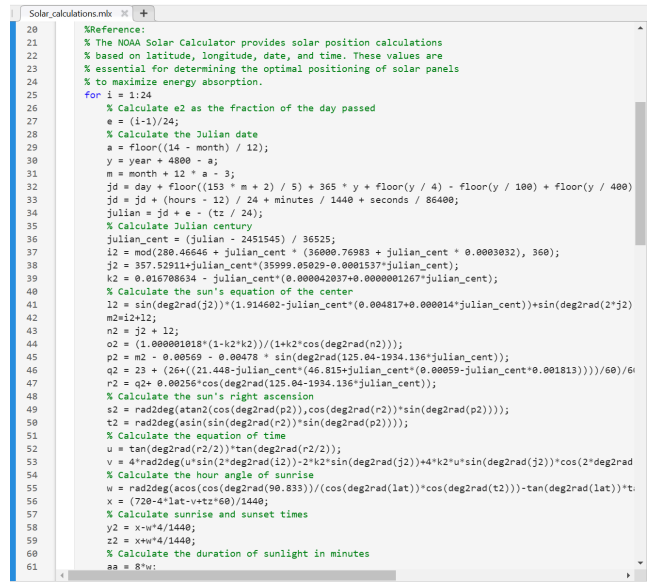

```
Solar_calculations.mlx
%Reference:
% The NOAA Solar Calculator provides solar position calculations
% based on latitude, longitude, date, and time. These values are
% essential for determining the optimal positioning of solar panels
% to maximize energy absorption.
for i = 1:24
    % Calculate e2 as the fraction of the day passed
    e = (i-1)/24;
    % Calculate the Julian date
    a = floor((14 - month) / 12);
    y = year + 4800 - a;
    m = month + 12 * a - 3;
    jd = day + floor((153 * m + 2) / 5) + 365 * y + floor(y / 4) - floor(y / 100) + floor(y / 400)
    jd = jd + (hours - 12) / 24 + minutes / 1440 + seconds / 86400;
    julian = jd + e - (tz / 24);
    % Calculate Julian century
    julian_cent = (julian - 2451545) / 36525;
    i2 = mod(280.46646 + julian_cent * (36000.76983 + julian_cent * 0.0003032), 360);
    j2 = 357.52911+julian_cent*(35999.05029-0.0001537*julian_cent);
    k2 = 0.016708634 - julian_cent*(0.000042037+0.0000001267*julian_cent);
    % Calculate the sun's equation of the center
    l2 = sin(deg2rad(j2))*(1.914602-julian_cent*(0.004817+0.000014*julian_cent))+sin(deg2rad(2*j2)
    m2=i2+l2;
    n2 = j2 + l2;
    o2 = (1.000001018*(1-k2*k2))/(1+k2*cos(deg2rad(n2)));
    p2 = m2 - 0.00569 - 0.00478 * sin(deg2rad(125.04-1934.136*julian_cent));
    q2 = 23 + (26+((21.448-julian_cent*(46.815+julian_cent*(0.00059-julian_cent*0.001813))))/60)/6
    r2 = q2+ 0.00256*cos(deg2rad(125.04-1934.136*julian_cent));
    % Calculate the sun's right ascension
    s2 = rad2deg(atan2(cos(deg2rad(p2)),cos(deg2rad(r2))*sin(deg2rad(p2))));
    t2 = rad2deg(asin(sin(deg2rad(r2))*sin(deg2rad(p2))));
    % Calculate the equation of time
    u = tan(deg2rad(r2/2))*tan(deg2rad(r2/2));
    v = 4*rad2deg(u*sin(2*deg2rad(i2))-2*k2*sin(deg2rad(j2))+4*k2*u*sin(deg2rad(j2))*cos(2*deg2rad
    % Calculate the hour angle of sunrise
    w = rad2deg(acos(cos(deg2rad(90.833))/(cos(deg2rad(lat))*cos(deg2rad(t2)))-tan(deg2rad(lat))*t
    x = (720-4*lat-v+tz*60)/1440;
    % Calculate sunrise and sunset times
    y2 = x-w*4/1440;
    z2 = x+w*4/1440;
    % Calculate the duration of sunlight in minutes
    aa = 8*w;
```

Fig. 3. MATLAB code for solar calculations

D. Dynamic Tracking Model Using Simulink

The reference angles obtained from MATLAB were applied to a Simulink-based dual-axis tracking model. We used Simulink to simulate the dynamic behavior of the tracking system, including motor actuation and rotational motion along two axes. Mechanical constraints were included to represent realistic system behavior. Worm–gear mechanisms were modeled to provide controlled motion, higher torque transmission, and prevention of back-driving. This simulation was used to evaluate tracking accuracy, system response, and stability.

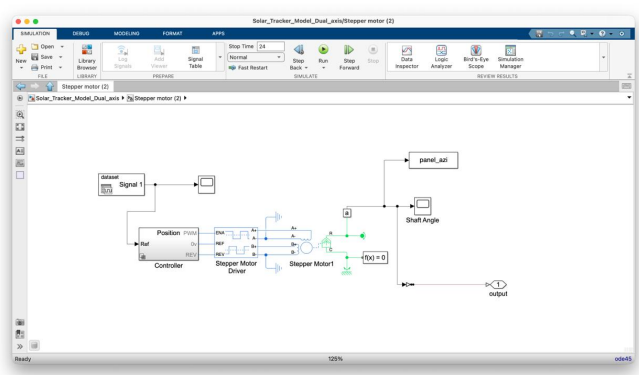

Fig. 4. Simulink Model 1

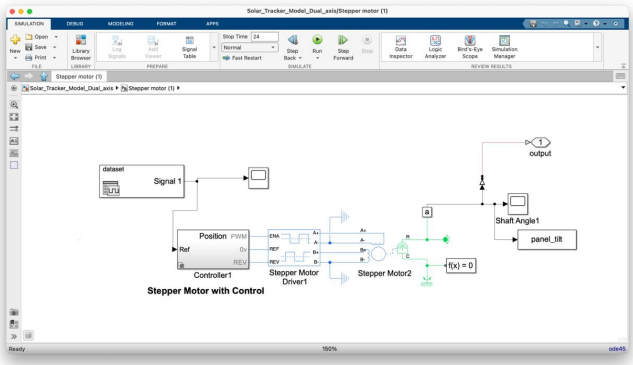

Fig. 5. Simulink Model 2

E. Mechanical Design and Validation Using SolidWorks

To ensure mechanical feasibility, we used SolidWorks to design the physical structure of the dual-axis solar tracker. A detailed 3D assembly was created to represent the solar panel mount, rotational axes, and supporting frame. SolidWorks motion simulation was then used to verify coordinated movement of both axes, check for mechanical interference, and ensure smooth operation of the system. This step confirms that the mechanical design supports the required tracking motion.

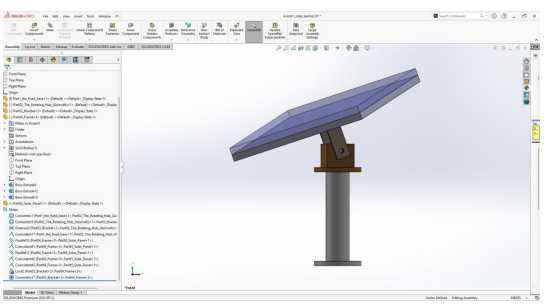

Fig. 6. Mechanical design with the design tree

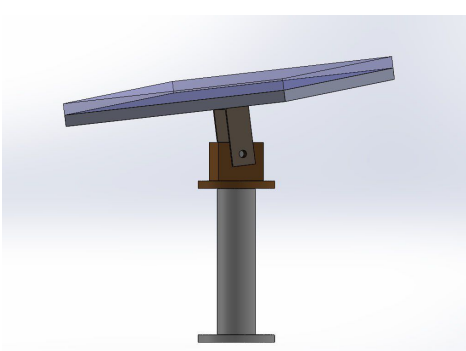

Fig. 7. Overall Mechanical Design

F. Performance Evaluation Approach

The simulation results obtained from MATLAB, Simulink, and SolidWorks were analyzed to evaluate the effectiveness of the proposed dual-axis tracking system. The system's ability to follow the sun's position and maintain proper panel alignment was observed and compared with fixed solar panel configurations. Improved alignment over time was used as the main performance indicator. This improved alignment demonstrates the effectiveness of the proposed system and indicates a higher potential for solar energy capture compared to fixed installations.

TABLE I
COMPARISON BETWEEN FIXED PANEL AND DUAL-AXIS TRACKING SYSTEM

Parameter	Fixed Panel	Dual-Axis Tracker
Panel orientation	Constant	Continuously adjusted
Ability to follow sun	No	Yes
Alignment accuracy	Low	High
Energy capture potential	Lower	Higher

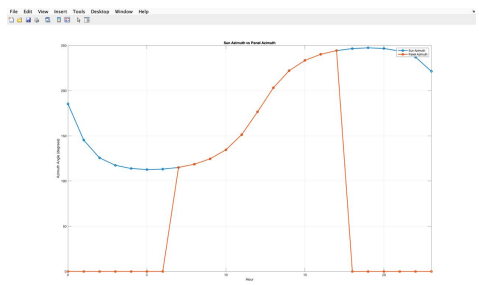

Fig. 8. Sun azimuth vs Panel azimuth

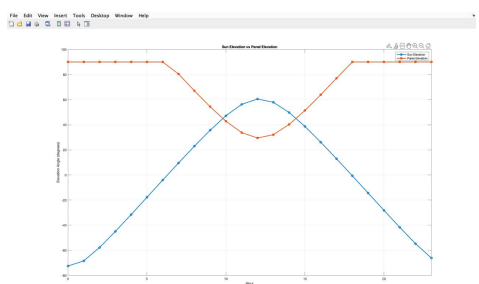

Fig. 9. Sun elevation vs Panel elevation

G. Limitations of the Methodology

This study is limited to simulation-based analysis and does not include physical hardware implementation. Environmental effects such as wind loads, sensor inaccuracies, and real-time disturbances were not considered. These limitations can be addressed in future work through experimental testing and hardware validation.

V. FINDINGS AND DISCUSSION

1) Solar Position Analysis: The MATLAB-based solar position calculations generated time-varying solar azimuth

and elevation angles, showing how the sun's position changes throughout the day. These results confirmed that a fixed solar panel cannot maintain optimal alignment with the sun for long periods, highlighting the need for a tracking system.

2) Tracking System Performance: The Simulink simulation results showed that the dual-axis tracking system was able to follow the reference solar azimuth and elevation angles closely. Compared to the fixed panel, the tracking system maintained better alignment with the sun throughout the simulation period. The use of worm-gear mechanisms ensured smooth and stable system operation.

3) Mechanical Validation Results: SolidWorks motion simulation verified that the mechanical structure of the dual-axis solar tracker supports coordinated movement along both axes. The simulations showed smooth rotation without mechanical interference, confirming the feasibility of the proposed mechanical design.

4) Fixed Panel vs Dual-Axis Tracker Comparison: A clear difference was observed when comparing the fixed panel system with the dual-axis tracking system. The fixed panel remained at a constant orientation, while the tracking system continuously adjusted its position to follow the sun. This improved alignment indicates a higher potential for solar energy capture in the dual-axis system.

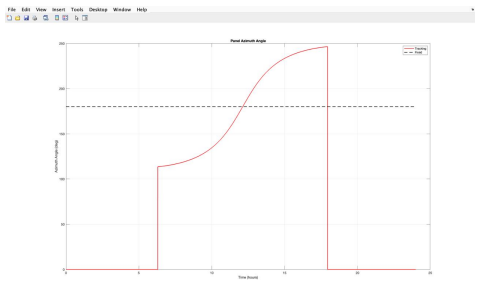

Fig. 10. Panel azimuth angle comparison of fixed vs tracking systems

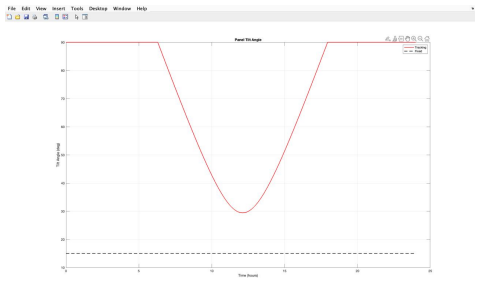

Fig. 11. Panel tilt angle comparison of fixed vs tracking systems

5) Summary of Findings: Overall, the simulation results demonstrate that the proposed dual-axis solar tracking system provides improved panel alignment compared to fixed solar panel configurations. The integrated use of MATLAB, Simulink, and SolidWorks effectively validated the analytical, dynamic, and mechanical aspects of the system.

VI. FUTURE WORK AND RECOMMENDATIONS

For future works, factors such as wind loading, sensor noise, and structural vibrations can be incorporated to better represent real-world operation. Further improvements can also be achieved by integrating feedback sensors and advanced or adaptive control strategies to enhance tracking accuracy and system reliability. In addition, future studies may include direct energy output analysis by measuring actual power generation and comparing the results with fixed and single-axis systems.

Based on the findings of this study, the combined use of MATLAB, Simulink, and SolidWorks provides an effective framework for analyzing solar position calculations, dynamic system behavior, and mechanical feasibility before hardware implementation. Future designs should aim to reduce mechanical complexity and system cost while maintaining accurate tracking performance to improve practical applicability.

VII. CONCLUSION

In this study to design a dual-axis solar tracking system, we used MATLAB to calculate solar azimuth and elevation angles and applied these values to a Simulink-based dual-axis tracking model to analyze system behavior. We also used SolidWorks motion simulation to design and validate the mechanical structure of the tracking system. The simulation results showed that the dual-axis solar tracking system maintained better panel alignment than a fixed panel system, with stable dynamic behavior and smooth mechanical motion. Although the study was limited to simulations, the results confirm the possible effectiveness of the proposed approach and provide a strong basis for future development of solar tracking systems.

REFERENCES

[1] T. P. Chang, "Performance study of solar trackers," Energy, vol. 35, no. 5, pp. 1931–1938, May 2010.
[2] A. Chauhan and R. P. Singh, "Performance analysis of solar tracking systems," Energy Procedia, vol. 54, pp. 146–152, 2014.
[3] S. A. Kalogirou, Solar Energy Engineering: Processes and Systems, 2nd ed. Oxford, U.K.: Academic Press, 2009.
[4] I. Reda and A. Andreas, "Solar position algorithm for solar radiation applications," Solar Energy, vol. 76, no. 5, pp. 577–589, 2004.
[5] .H. A. Kazem, M. T. Chaichan, A. H. A. H. Al-Waeli, and K. Sopian, "Dual axis solar photovoltaic trackers: An in-depth review," Energy Sources, Part A: Recovery, Utilization, and Environmental Effects,vol. 46, no. 1, pp. 15331–15356, 2024.
[6] A. H. Al-Zubaidy, M. Hasan, and S. M. Muyeen, "A comprehensive review of solar tracker technologies," Advances in Renewable Energy, vol. 2014, Art. no. 629717, 2014.